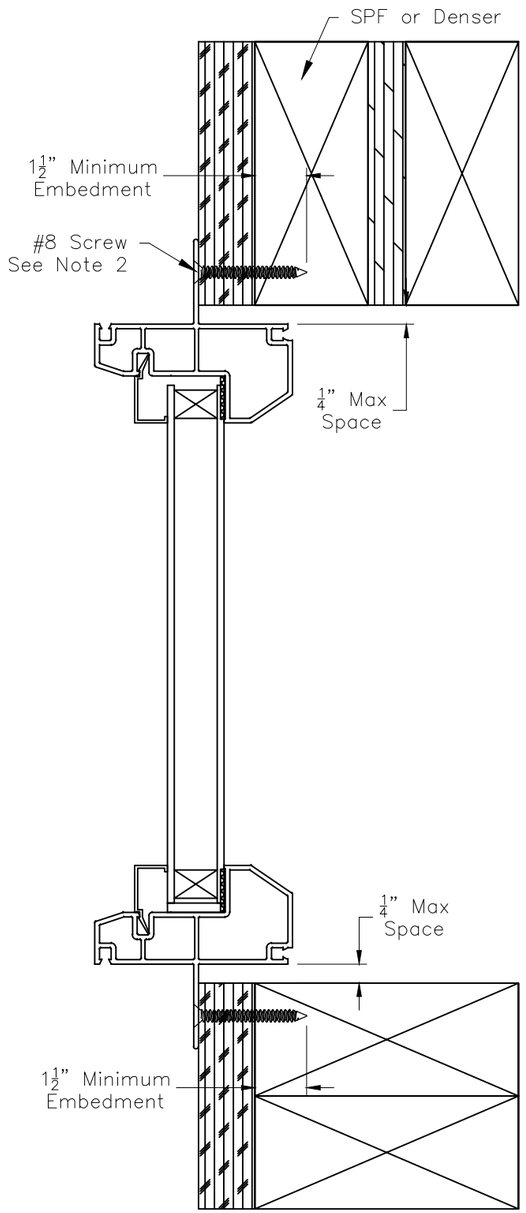

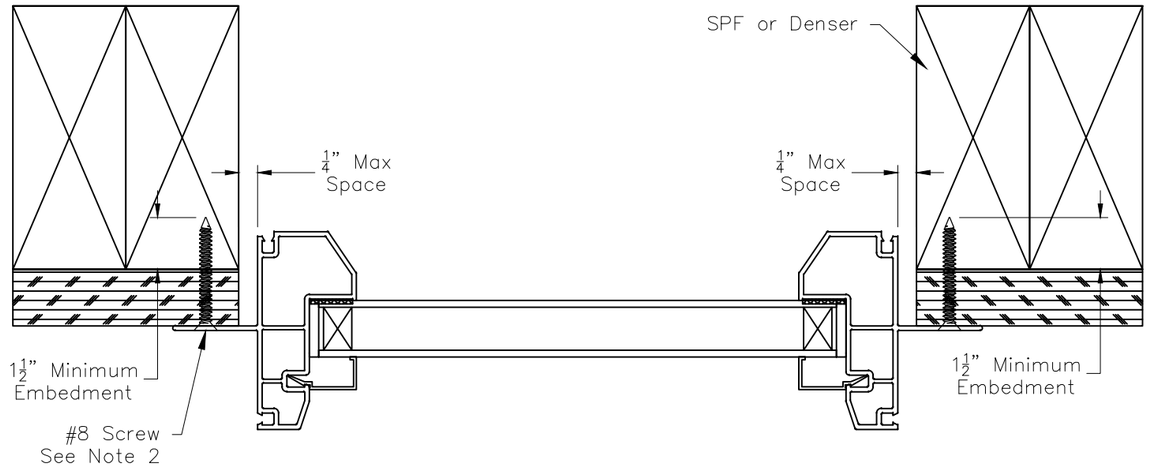

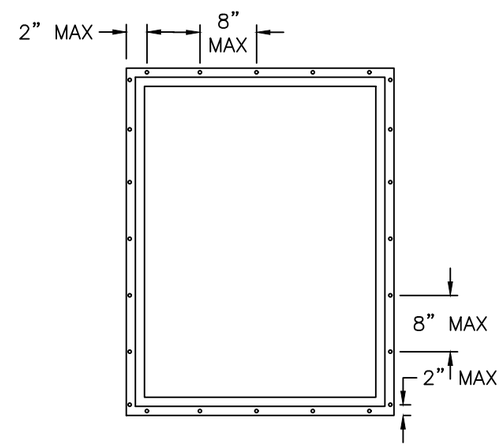

Elevation View

Table 1 – Verified Installations		
DP (psf)	Width (in)	Height (in)
+/– 50.0	72	72
+/– 50.0	48	84

NOTES:

1. INSTALLATIONS SHOWN ON THIS DRAWING HAVE BEEN VERIFIED AS THE AS–TESTED INSTALLATION FOR THE PERFORMANCE LEVEL SHOWN. VERIFIED PRODUCTS ARE LISTED IN TABLE 1. THIS DRAWING APPLIES ONLY TO THOSE PRODUCTS.
2. INSTALLATION ANCHORS SHALL BE #8 SCREWS OF SUFFICIENT LENGTH TO ACHIEVE MINIMUM EMBEDMENT OF 1–1/2" INTO WOOD FRAMING MEMBER. SCREWS SHALL SATISFY NATIONAL DESIGN SPECIFICATION FOR MATERIAL PROPERTIES AND DIMENSIONS. EDGE DISTANCES SHALL BE MINIMUM ⅜" PER CURRENT NDS.
3. WOOD FRAMING SHALL BE SPRUCE–PINE–FIR (G=0.42) OR DENSER.
4. INSTALLATION ANCHORS SHALL BE LOCATED WITHIN 1/2" OF THE SPECIFIED LOCATION.
5. MAXIMUM SHIM SPACE SHALL BE 1/4". SPACES GREATER THAN 1/16" REQUIRE LOAD BEARING SHIMS.
6. INSTALLATION ANCHORS ARE SHOWN GOING THROUGH EXTERIOR FINISH. ANCHORS MAY BE INSTALLED DIRECTLY INTO WOOD FRAMING MEMBER WITH 1–1/2" MINIMUM EMBEDMENT STILL REQUIRED. EDGE DISTANCES SHALL BE MINIMUM ⅜" PER CURRENT NDS.
7. INSTALLATION ANCHORS SHALL BE LOCATED 2" FROM CORNERS AND 8" MAXIMUM ON CENTER SPACING.
8. THESE INSTRUCTIONS ADDRESS STRUCTURAL REQUIREMENTS ONLY. WINDOWS SHALL BE INSTALLED PER ASTM E2112 OR FMA/AAMA 100.
9. SMALLER WINDOWS OF THE SAME CONSTRUCTION AND EQUAL OR LESSER DESIGN PRESSURES ARE COVERED BY THIS DRAWING.
10. GLAZING TYPE, GLASS TYPE, AND GLASS THICKNESS ARE ESTABLISHED BY THE CERTIFICATION AND SHALL SATISFY ASTM E1300. GLAZING TYPE MAY BE INSULATING GLASS OR SINGLE PANE GLASS.
11. PRODUCTS LISTED IN TABLE 1 ARE NOT IMPACT RESISTANT. IF USED IN WIND–BORNE DEBRIS REGIONS, APPROVED PROTECTION DEVICES ARE REQUIRED.
12. PRODUCT OR INSTALLATION IS NOT APPROVED FOR HIGH VELOCITY HURRICANE ZONE (HVHZ)

THIS DRAWING IS PROPRIETARY AND CONFIDENTIAL TO ATRIUM COMPANIES, INC. AND SHALL NOT BE REPRODUCED, COPIED, OR DISSEMINATED WITHOUT THE EXPRESSED WRITTEN PERMISSION OF ATRIUM COMPANIES, INC.

ATRIUM COMPANIES, INC.

Title: Atrium Series 5700/105 Picture Window Fin Installation Drawing

No.	Date	Revision Description	By	ECN #
1	1–12–07	Glass deduct changed from 0.812 to 0.875.	JPP	2007–1072
2	2–27–09	Added ⅜" OA IG detail.	DJC	2009–1536
3	3–2–10	Updated CAD format and corrected profile geometry. Updated glass size to match production. Completely redrew drawing.	CRA	2009–1690
4	11–6–14	Table 1–Width changed from 82" to 72", & screw placement from 6" to 8" (Elevation View) to match most recent test reports.	JKW	---
5	03-24-25	Updated to current FBC.	LMH	----

Material (Type–Alloy–Temper):	Est. Area (in²): NA	Tolerances: X.XX = ±X.XX
----	Est. Weight (lb/ft): NA	X.XXX = ±X.XXX X.X° = ±X.X°

Drawn By:	Approved By:	Date:	Scale:	Sheet Size:
RI	DEH	2–24–2006	1:2	ANSI B

ECN# (initial Issue):	File Name:	Sheet 1/3
Not Issued	ADW–01 5700 8050 PW ASSY	